Rev.	date	Description revision
A		

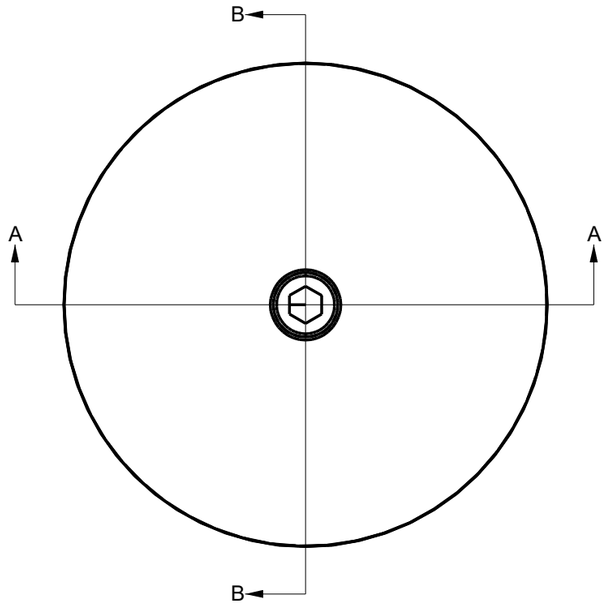

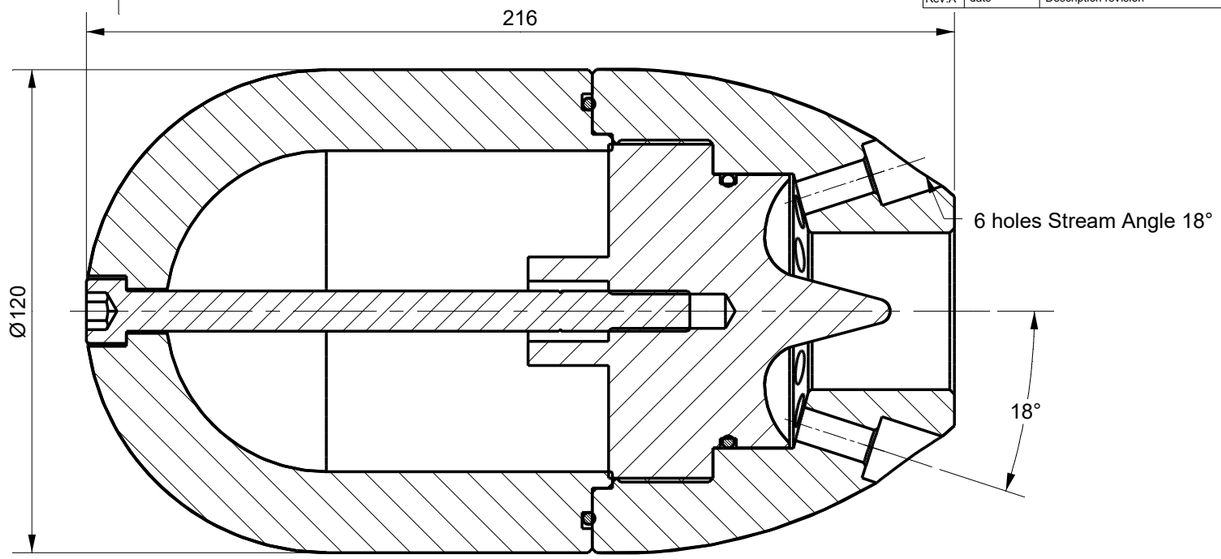

Section B-B

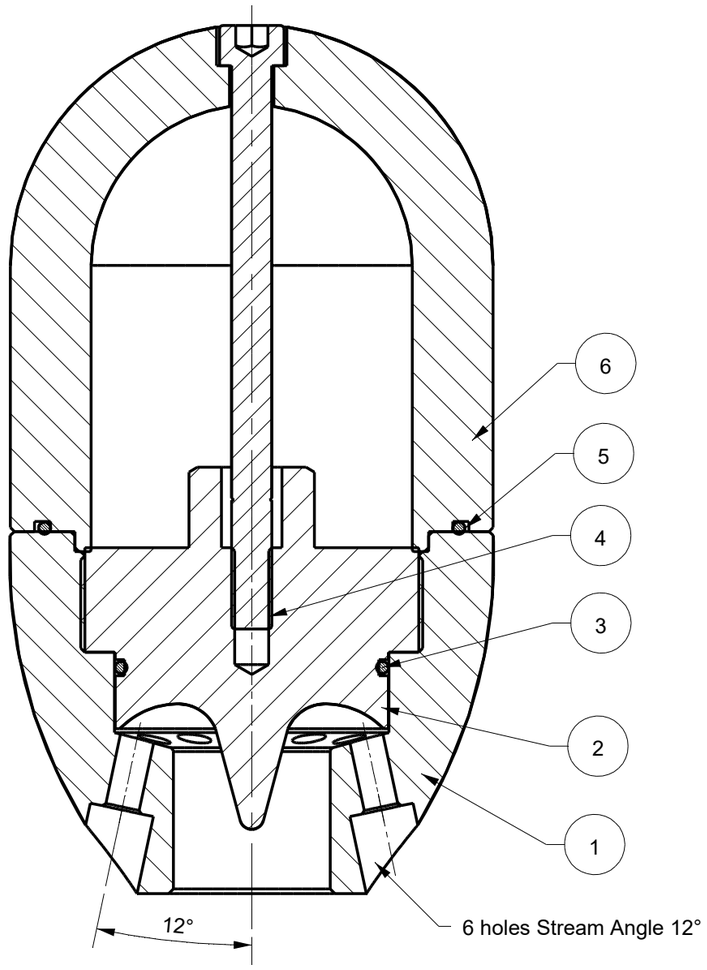

Section A-A

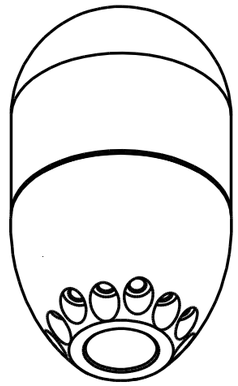

Pos.	Nr.	Description	Material	Drawing nr.	Remarks
6	1	Front Part		71212-S1	
5	1	O-ring			
4	1	Hex Socket cap screw M10 X 140	St.St. 316		DIN 912
3	1	O-ring			
2	1	Flow Reducer	St.St. 316	71212-S3	
1	1	Inlet Part		71212-S2	

Tolerances
Unless Otherwise Specified
ACC. DIN-ISO 2768 -1and 2
Angular +/- 0,3°
Corners <0,2x45° / R<0,2

Finish
--

Dimension (No Decimals)	0 t/m 6	6 t/m 30	30 t/m 120	120 t/m 400	400 t/m 1000
Tolerance	0,1	0,2	0,3	0,5	0,8

Material
--

	Name	Date	Remarks
Drawn		10-5-2024	
Checked			
Projection			

Drawing remains the property of Salomon Jetting Parts B.V.

Unit: mm
Number:

Description
Grenade Bomb DEK 120

Project

Salomon Jetting Parts B.V.
Reedijk 8-1
3274 KE Heinenoord
www.sjpbv.com
info@sjpbv.com
+31 (0) 88 126 1900

Size	Drawing nr.	Rev
A3	71212	A
Scale 1:1.5	CAD File	Sheet 1 of 1