SALOMON JETTING PARTS

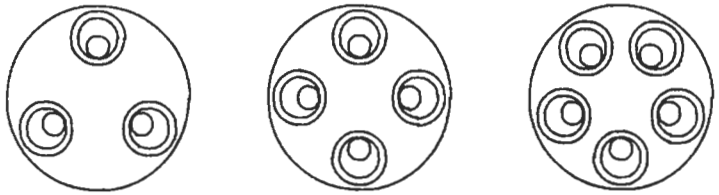

P/N 3144-3
3-NOZZLE CARRIER

P/N 3144-4
4-NOZZLE CARRIER

P/N 3144-5
5-NOZZLE CARRIER

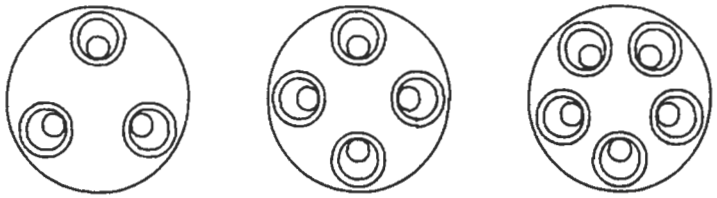

P/N 3143-3
3-NOZZLE CARRIER

P/N 3143-4
4-NOZZLE CARRIER

P/N 3143-5
5-NOZZLE CARRIER

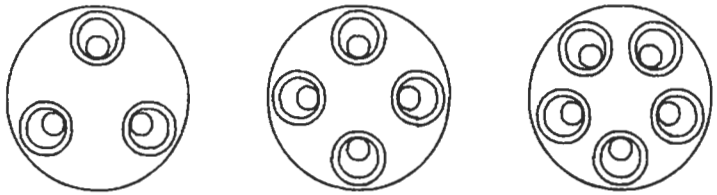

P/N 3142-3
3-NOZZLE CARRIER

P/N 3142-4
4-NOZZLE CARRIER

P/N 3142-5
5-NOZZLE CARRIER

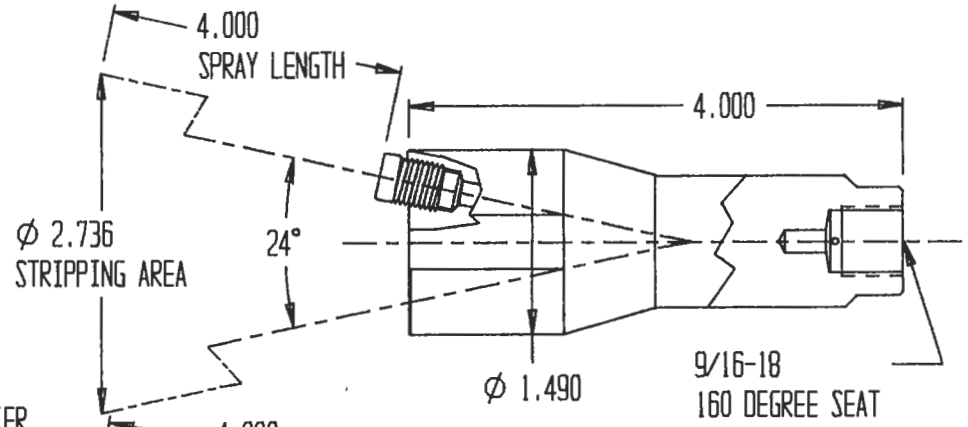

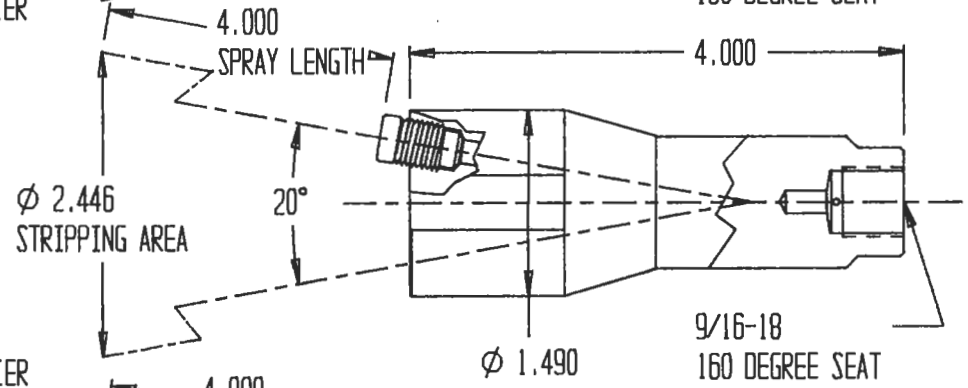

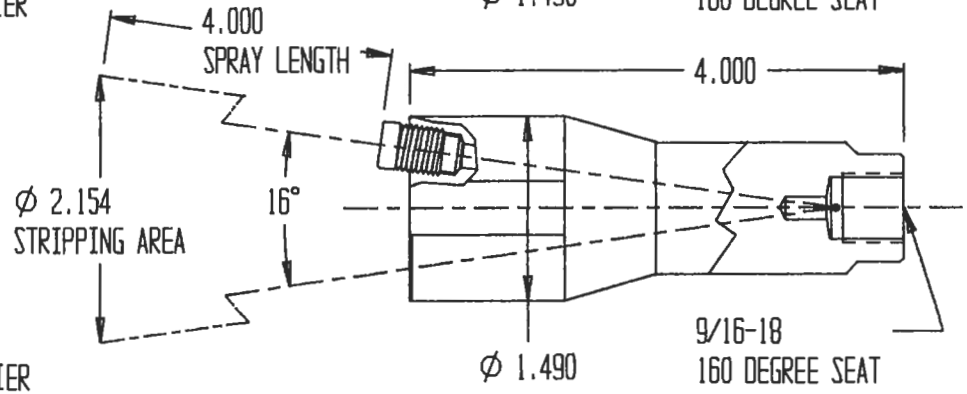

UTILIZING GATTI P/N 3024: 3/8-24 ORIFICE ASSY

UNLESS OTHERWISE SPECIFIED:
DIMENSIONS ARE IN INCHES TOLERANCES ON DIM SURFACE FINISH 63
2 PL DEC +/-.01 3PL DEC +/-.005 ANGLES +/-.5

ECO - DATE	1-22-99												MATERIAL:	SCALE	DRAWN/DESIGN	DATE	CHECKED/TOOLING	APPROV
															L HEWITT	1-22-99		
REV.	J													NAME			DWG. NO.	
														3/8 NOZ CARRIER CONFIGURATION			SK-725	